AC and DC House Wiring Efficiency Estimations Using a Fast Extensive Measurements Approach

J. A. Qureshi
Aurora Energy

T. T. Lie
Auckland University of Technology

K. Gunawardane
Auckland University of Technology

N. Kularatna
University of Waikato

DC-based appliances are exponentially increasing in the present market. This scenario opens the opportunity to utilize the DC electricity produced by the PV panels directly without going through the conversion stages. Due to high penetration of DC electricity sources, it is timely to utilize DC electricity directly. Several research works have been reported in the literature to experimentally test and compare AC and DC wiring options. Accurate and precise experimental measurements are vital to establish a sound theoretical basis. However, this is difficult due to cost and time constraints. Therefore, to avoid costly measurements, this paper develops a mathematical model based on measurements on selected AC and DC wiring at four voltage levels (12 V DC, 24 V DC, 48 V DC, and 230 V AC). A digital simulation calibration using DigSilent is conducted to validate the proposed mathematical model. This paper proposed to utilize the simulation calibration approach that is a cost-effective and timesaving option to perform extensive measurements accurately.

Keywords: AC and DC, fast extensive measurements, house wiring

INTRODUCTION

DC loads are penetrating residential houses, where 33% of the total household load power demand could be reduced by using DC appliances with the existing AC grid (Garbesi, 2012). The Netherlands Energy Research Foundation found that 2,089 kWh electricity per year could be conserved per household by replacing AC loads with DC loads (Pellis et al., 1997). Currently, power from Distributed Generation (DG) units, e.g., photovoltaic (PV) panels, fuel cells, and energy storage systems, is converted into AC for power distribution to residential homes. The AC power is then converted back to DC to feed DC loads (Nilsson et al., 2004). A reduction in power loss of up to 14% could be realized by avoiding the conversion

from AC to DC (Garbesi, 2012). This opens the opportunity to utilize the DC electricity produced by the DG units, such as PV panels, directly for DC power distribution.

Energy efficiency and power loss calculations are suitable methods to analyze the AC and DC systems (Pellis et al., 1997; Friedemen et al., 2008). Similarly, line losses were estimated mathematically to compare the DC and AC power distribution systems in residential buildings for various DC voltage levels from 12 V to 380 V (Vossos, 2011; Engelen et al., 2006; Amin et al., 2011; Hammerstrom, 2007; Paajanen et al., 2009; Postiglione, 2001; Starke et al., 2008; Justo et al., 2013). These estimated efficiencies are close to the actual savings; however, the installation conditions, proximity factor, and temperature were not considered for calculations; therefore, these estimates do not represent the accurate experimental data using calibrated measuring instruments.

Four DC micro/nano grids have been experimentally implemented and tested to collect accurate experimental data (Cvetkovic et al., 2012; Cetin et al., 2010; Kaur et al., 2015; Salomonsson et al., 2007; Boeke et al., 2015). These cases are limited to few load values at one or two conductor lengths. However, there are thousands of possible wiring cases depending on the conductor length, conductor size, and load power rating. Therefore, thousands of precise and accurate experimental measurements are needed to help in selecting the most efficient and suitable wiring system.

Advanced instrumentation and measurement technologies, such as calibrated power loggers, multi-meters, and clamp meters, are available in the present market to measure AC and DC power accurately based on the Fluke 6100A Electrical Power Standard. Recently, numerous studies have focused on the calibration and accuracy of measuring devices (Djokic et al., 2017; Li et al., 2018). Moreover, digital simulation techniques are used for extensive data collection. Low voltage AC and DC distribution systems have been simulated with assumed data to compare the efficiency of DC with AC homes (Seo et al., 2011; Schönberger et al., 2006; S. C. T. C. (Korea), 2011). Recently, some studies on DC power distribution have been done with the help of simulation models (Backhaus et al., 2015). None of these existing simulation studies were conducted based on experimental measurements using calibrated instruments. Therefore, there is no validated simulation model that could be used to represent the system measurements accurately and precisely.

Qureshi et al. (2021) presented an approach to overcome the time and accuracy challenges using a mathematical model. This approach requires us to separately check the design limitations and filter those scenarios from the boundary conditions. Therefore, a valid simulation model can enable us to run thousands of scenarios using an integrated network-level study to further expand this research in future.

Qureshi et al. (2018) presented a validated simulation model approach based on accurate experimental measurements. However, the mathematical models, simulation script flow chart, and experimental and correlation analysis data do not support the key results. This was due to the lack of the development of digital simulation studies to validate the model. Moreover, Qureshi et al. (2018) does not provide enough results for a complete house wiring comparison as the boundary conditions are limited to 1.5 mm^2 wire, which was chosen because it is commonly used in many countries. Further explanation on wiring sizes and topologies is presented in the next section.

Due to all these important shortcomings, the primary objective of this research is to conduct accurate and precise measurements for thousands of wiring cases efficiently. The paper proposes to develop mathematical models based on experimental measurements. Then, digital simulation studies are conducted on the calibrated and validated mathematical models to measure 125,000 readings using the well-established DigSilent Software package.

WIRING TOPOLOGIES

DC wiring topologies can be proposed at different voltage levels, ranging from 12 V DC to 380 V DC. This research is limited to voltages below 50 V DC, which allows the utilization commonly used energy systems in New Zealand. Therefore, three DC voltage levels, i.e., 12 V, 24 V, and 48 V, are selected to compare with the existing 230 V AC wiring system.

In New Zealand, 3-core Tough Plastic Sheath (TPS) wire is used for domestic wiring. In addition, 1 mm^2 wire size is used for lighting circuits and 2.5 mm^2 for power circuits; however, 1.5 mm^2 is used in many countries for lighting and power circuits. Therefore, 1 mm^2, 1.5 mm^2, and 2.5 mm^2 wiring options are investigated at the Centre for Energy and Power Engineering Research Lab of Auckland University of Technology (AUT).

In AC wiring topology, DC power from a regulated DC source is converted to 230 V AC. Then, AC power is transferred through house wiring and converted back to DC to feed efficient DC load as shown in FIGURE 1. However, in DC wiring topology, DC power from a regulated DC source is transferred directly through the house wiring as shown in FIGURE 2. The DC–DC converter is used in DC wiring topology as various DC loads operate at different DC voltage levels.

FIGURE 1
AC WIRING TOPOLOGY TO FEED DC LOADS THROUGH DC SOURCE

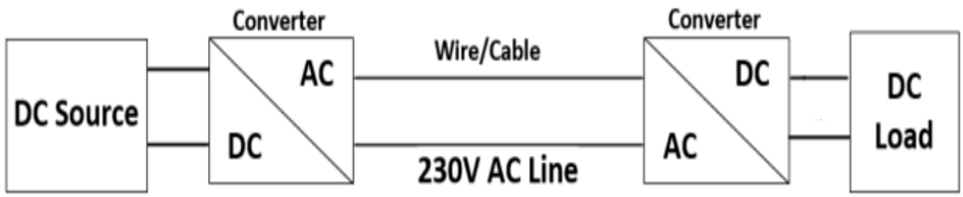

FIGURE 2
DC WIRING TOPOLOGY TO FEED DC LOADS THROUGH DC SOURCE

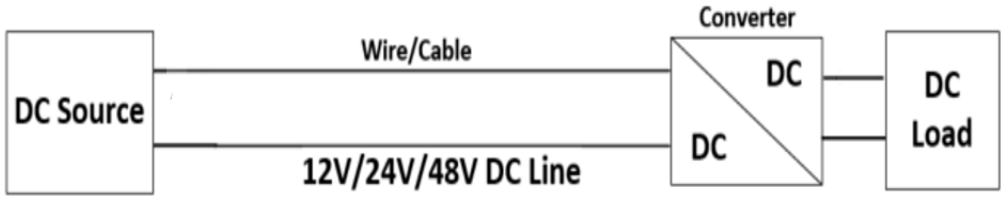

EXPERIMENTAL SETUP AND MEASUREMENTS

An experiment is set up (FIGURE 3) at AUT Centre for Energy and Power Engineering Research to take measurements of AC and DC wiring topologies and gather enough data for the development of the mathematical models. Experiments are conducted considering a residential house with DC power to feed DC loads as shown in FIGURES 3(a) and 3(b). Experimental components along with specifications are summarized in TABLE 1.

TABLE 1
SPECIFICATIONS OF EXPERIMENTAL COMPONENTS

Component	Specification
DC/DC converter	Vin = 9.2–18 V DC Vout = 12 V DC Power = 50 W
DC/DC converter	Vin = 19–72 V DC Vout = 12 V DC Power = 480 W

AC/DC converter	Vin = 230 V AC Vout = 12 V DC Power = 450 W
DC/AC converter	Vin = 12 V DC Vout = 230 V AC Power = 360 W
MPPT charge controller	Vin < 150 V DC Vout = 12 V DC, 24 V DC, 48 V DC Power = 800 W
PV Panel	Maximum Vout = 32.38 V Power = 270 W
Battery	Voltage = 12 V DC Capacity = 240 AH
Cable	TPS 1.5 mm^2 2-core + Earth
DC circuit breaker	32 A

FIGURE 3
EXPERIMENT SETUP AT AUT LABORATORY

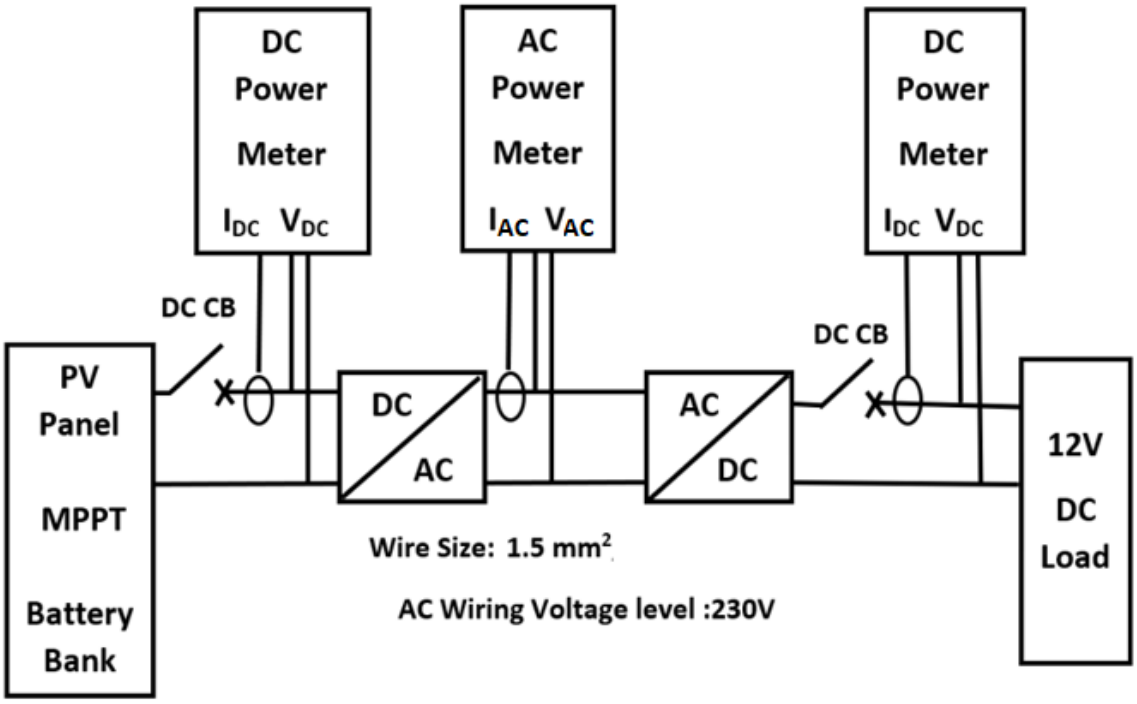

3(a) AC wiring topology

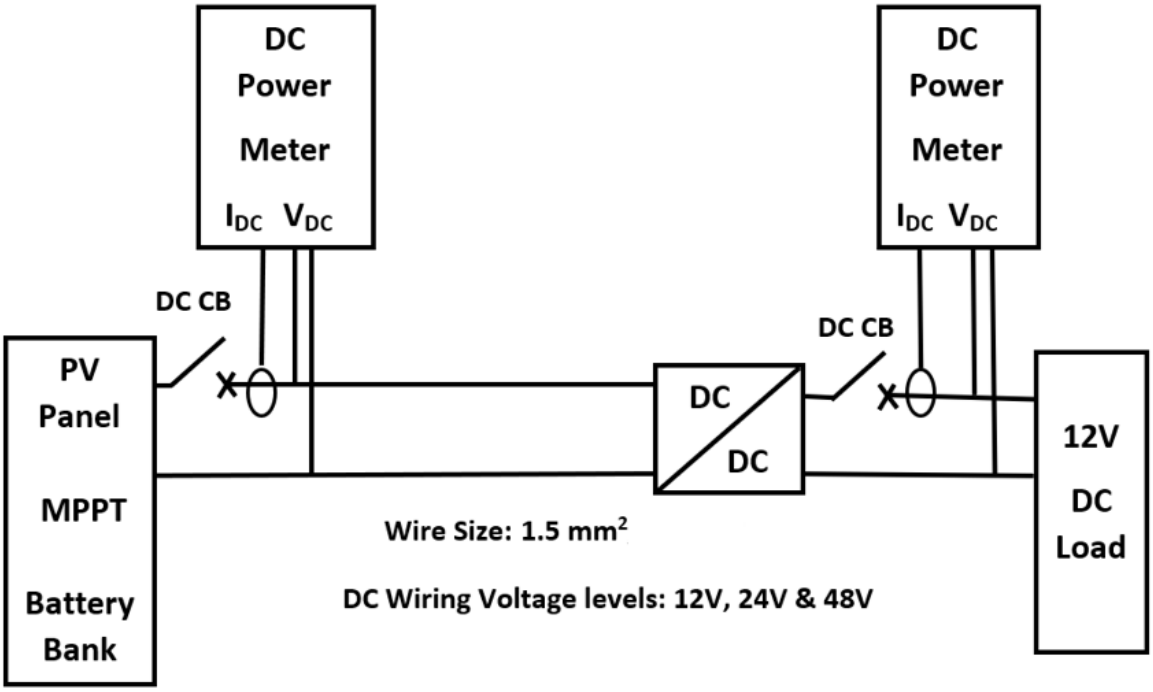

3(b) DC wiring topology

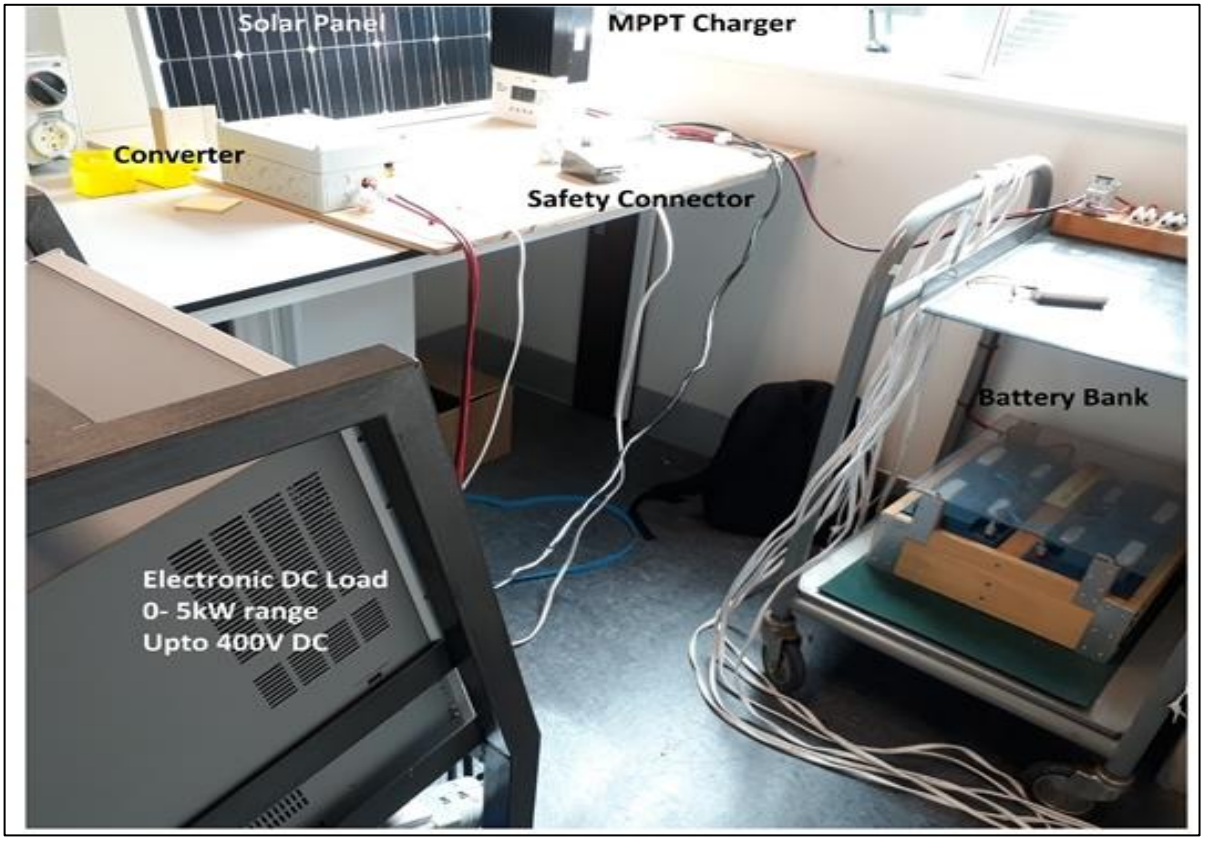

3(c) Experimental setup

The design of the solar energy system was based on AS/NZS 4509.2:2010. AC wiring topologies were based on AS/NZS 3000, and the low voltage DC wiring installation was carried out as per NZS 3015:2004. The in-service safety inspection of electrical equipment, including converters, was carried out as per AS/NZS 3760:2010.

Similar DC loads have been used to compare the efficiencies of all proposed AC and DC wiring topologies. The output voltage of all converters is fixed at 12 V to compare the power losses on similar grounds. 3-core Tough Plastic Sheath (TPS) wire is used for domestic wiring in New Zealand and other countries. In New Zealand, 1 mm^2 wire size is used for lighting circuits and 2.5 mm^2 for power circuits. A medium-sized conductor of 1.5 mm^2 has been used for experimentation due to time and cost constraints. Design limitations, such as current loading and voltage drop, were considered for 1.5 mm^2 wire size; therefore, this power range has been slightly reduced in low voltage DC wiring topologies.

In total, 184 AC and DC wiring cases were tested experimentally for 1.5 mm^2 wiring option based on the specifications and power flow requirements of converters. This covers the load power ratings from 5 W to 175 W at 12 V DC, 24 V DC, 48 V DC, and 230 V AC voltage levels. The 12 V DC wiring topology is limited to 50 W for experimental verification due to the voltage drop constraints of 1.5 mm^2 wire size. Similarly, 24 V DC wiring testing was limited to 150 W.

Measurements of 230 V AC wiring topology with 1.5 mm^2 wire were taken as per FIGURE 3(a). Measurements of 12 V, 24 V, and 48 V DC wiring topologies were taken as per FIGURE 3(b). Experimental efficiencies of AC and DC wiring systems are summarized in TABLE 3. These results are limited to 184 wiring options due to hardware limitations. These results cannot be used as selection criteria for the thousands of possible wiring options in a residential house. However, the measured data can be used to develop a validated simulation model for estimating the efficiency of thousands of wiring cases. The details will be presented in the next section.

MATHEMATICAL MODELLING

This section aims to develop a mathematical model based on the data gathered from the experiments. To validate the proposed mathematical model, a digital simulation model using the well-established software package DigSilent was developed. Then, simulation studies were conducted to show the effectiveness of the proposed mathematical model as compared to experimental results.

Power Losses in AC and DC Lines

FIGURE 4 depicts a simple single-phase AC system. The power losses in the two wires of a single-phase AC system can be calculated using Eq. (1) (Pellis et al., 1997):

$$\Delta P_{ac} = 2\, r_{AC} * L\, I_{ac}^2 = 2.\frac{R_{AC}}{cos^2\varphi}.\frac{P^2}{U_{ac}^2}, \tag{1}$$

where ΔP_{ac} – Power losses in AC line
R_{AC} – AC resistance of the conductor
$Cos\ \phi$ – Power factor of load
U_{ac} – RMS AC phase voltage at the load terminal
P – Power consumption by load

The same system (FIGURE 4) is used for DC power flow analysis. Because the frequency of DC is zero, the reactance component is eliminated from the DC power distribution lines as shown in FIGURE 5. The power losses in a two-wire DC system can be calculated using Eq. (2) (Pellis et al., 1997):

$$\Delta P_{dc} - 2.r_{DC}\, L\, I_{dc}^2 = 2.R_{DC}\frac{P^2}{U_{dc}^2}, \tag{2}$$

where ΔP_{dc} – Power losses in DC line
R_{DC} – DC resistance of the conductor
U_{dc} – RMS DC phase voltage at the load terminal

FIGURE 4
PARAMETERS IN SINGLE-PHASE AC POWER DISTRIBUTION SYSTEM

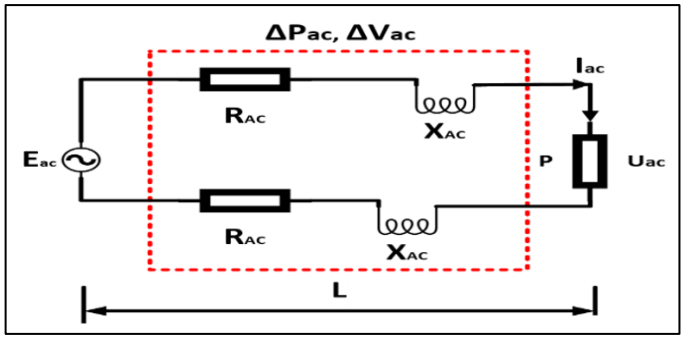

FIGURE 5
PARAMETERS IN DC POWER DISTRIBUTION SYSTEM

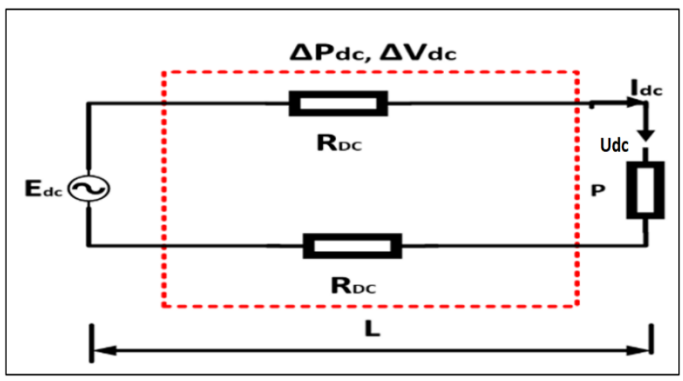

Power Losses in Converters

Losses in power converters depend on the no-load and switching loss factors. Power loss in a converter can be calculated using Eq. (3) (DigSilent Power Factory, 2015):

$$P_{LC} - P_{NL} + P_{SL} \times I_{load}, \quad (3)$$

where P_{LC} – Total power loss in a converter
P_{NL} – Noload power loss in a converter
P_{SL} – Switching power loss in a converter
I_{load} – Load current

Experimental measurements have been used to develop mathematical models of power converters using Eureqa Formulize software developed by Cornell's Artificial Intelligence Lab (Cornell's Artificial Intelligence Lab, 2017). It is a data mining tool that generates accurate (within 5% error) mathematical models to identify the hidden patterns in data (Eureqa Formulize, 2017).

Power input and output values were imported into Eureqa Formulize software to drive the equation of power loss as a function of connected load. The mathematical models of power losses in the DC-to-AC converter and DC-to-AC converter can be expressed as shown in Eqs. (4) and (5):

$$P_{LC/DC-AC} - 5.49 + 0.08P_{Load}, \quad (4)$$

$$P_{LC/AC-DC} - 13.2 + 0.151P_{Load}, \quad (5)$$

where $P_{LC/DC-AC}$ – Power loss in DC − to − AC converter in watts
$P_{LC/AC-DC}$ – Power loss in DC − to − AC converter in watts
P_{Load} – Connected load

Similarly, based on the experimental data in this research, the mathematical models of power losses in DC-to-DC converters can be developed for 12 V, 24 V, and 48 V DC voltage options as represented in Eqs. (6), (7), and (8) (Eureqa Formulize, 2017):

$$P_{loss-12V\ DC/DC} - 1.5 + 0.265\ P_{Load}, \quad (6)$$

$$P_{loss-24V\ DC/DC} - 18.5 + 0.14\ P_{Load}, \quad (7)$$

$$P_{loss-48V\ DC/DC} - 17.7 + 0.14\ P_{Load}. \quad (8)$$

Total Power Losses in AC and DC Wiring Topology

There are three sources of power loss in AC wiring topology. First, DC power is converted to AC for power distribution, which causes power losses in the DC-to-AC converter. Second, AC power is transferred through cables, which causes line losses. Finally, AC power is converted back to DC to feed efficient DC loads, which causes power losses in the AC-to-DC converter. Therefore, total power losses in AC wiring topology can be calculated using Eq. (9):

$$P_{T-AC} - P_{LC/DC-AC} + \Delta P_{ac} + P_{LC/AC-DC}, \quad (9)$$

where P_{T-AC} – Total power losses in AC wiring topology
$P_{LC/DC-AC}$ – Power loss in DC − to − AC converter
ΔP_{ac} – Power loss in AC line
$P_{LC/AC-DC}$ – Power loss in AC − to − DC converter

There are two sources of power loss in DC wiring topology. First, DC power is distributed directly through wiring, which causes line losses. Second, DC line voltage is converted as per the voltage requirements of DC loads, which causes power losses in the DC-to-DC converter. Therefore, total power losses in DC wiring topology can be represented by Eq. (10):

$$P_{T-DC} - \Delta P_{dc} + P_{LC/DC-DC}, \quad (10)$$

where P_{T-DC} – Total power losses in AC wiring topology
ΔP_{dc} – Power loss in DC line
$P_{LC/DC-DC}$ – Power loss in DC − DC converter

CALIBRATION AND VALIDATION

This section presents the development of a digital simulation model used for validating the developed mathematical model. The AC and DC house wiring simulation models were developed using DigSilent Power Factory software. The developed mathematical models of converters are used to compute the no-load loss factor and switching loss factor for the simulation models as summarized in TABLE 2. Calculated

parameters of actual experiments are used to calibrate the converters used in simulation models. Experimental cases were repeated to recheck the efficiency of similar 184 cases using a calibrated simulation model as summarized in TABLE 3.

Correlation analysis was used to correlate the experimental efficiencies with simulation efficiencies using Eq. (11). This was to verify how good the results generated by the developed mathematical model are compared to the results from the experimental studies. The Coefficient of Determination (*CoD*) is calculated using Eq. (12) to find the similarity between the experimental data and simulation data for 230 V AC, 12 V DC, 24 V DC, and 48 V DC wiring topologies as summarized in TABLE 4:

$$r = Correl(X, Y) = \frac{\sum(x-\bar{x})(y-\bar{y})}{\sqrt{\sum(x-\bar{x})^2 \sum(y-\bar{y})^2}}, \tag{11}$$

where r – Coefficient of correlation
X – Experimental efficiency
Y – Simulation efficiency
$\overline{x}$ *and* $\overline{y}$ – Sample means of both variables

$$CoD = r^2 \tag{12}$$

Percentage similarity between experimental and simulation efficiency validated the simulation models as outlined in TABLE 4. Thus, these validated simulation models can be used to observe and analyze thousands of wiring cases. The similarity is more than 99.6% for three wiring topologies, i.e., 230 V AC, 24 V DC, and 48 V DC. From the simulation results, the efficiencies are close to the experimental efficiency results for most of the readings for loads above 10 W. Loads below 10W, 12 V DC wiring topology has comparatively high No-load power losses as compared to switching losses of a DC-DC converter. Therefore, the similarity is relatively low for 12 V DC wiring topology as summarized in TABLE 4. However, the similarity of 12 V cases is circa 99% for load values above 10 W. To conclude, the mathematical models are valid and can be used for loads above 10 W to achieve overall 99.6% accuracy. These errors could be because the experimental studies were done only on 1.5 mm2 wire, meaning some losses from the wire and measurement devices.

TABLE 2
NO-LOAD AND SWITCHING POWER LOSS FACTORS OF CONVERTERS

Converter	Actual Input Voltage	Actual Output Voltage	No-load Power Loss (W)	Switching Power Loss (W/A)
DC to AC	24 V DC	230 V AC	5.49	1.92
AC to DC	230 V AC	12.1 V DC	13.2	1.827
DC to DC	11.4–12 V DC	12.1 V DC	1.5	3.2065
DC to DC	22.8–24 V DC	12 V DC	18.5	1.68
DC to DC	45.6–48 V DC	12 V DC	17.7	1.68

TABLE 3
EXPERIMENTAL AND SIMULATION EFFICIENCIES OF AC AND DC WIRING TOPOLOGIES

Load (W)	length (m)	230 V AC Experiment	230 V AC Simulation	48 V DC Experiment	48 V DC Simulation	24 V DC Experiment	24 V DC Simulation	12 V DC Experiment	12 V DC Simulation
5	2.5	19.16%	19.08%	23.54%	21.55%	22.90%	20.83%	68.27%	67.57%
	5	19.19%	19.08%	23.99%	21.55%	23.01%	20.75%	67.70%	67.57%
	10	19.12%	19.08%	23.34%	21.55%	22.46%	20.66%	68.27%	67.57%
	20	19.27%	19.08%	23.31%	21.46%	21.84%	20.58%	67.32%	66.67%
	30	19.24%	19.08%	22.87%	21.46%	21.53%	20.41%	66.39%	65.79%
10	2.5	31.70%	30.77%	33.79%	34.48%	32.76%	33.56%	75.74%	71.94%
	5	31.70%	30.77%	33.63%	34.48%	32.87%	33.44%	75.17%	71.43%
	10	31.83%	30.77%	33.56%	34.48%	32.33%	33.33%	74.61%	70.92%
	20	31.77%	30.77%	33.33%	34.36%	31.51%	33.00%	72.90%	69.93%
	30	31.83%	30.77%	32.78%	34.36%	30.94%	32.68%	NA	NA
25	2.5	51.15%	48.73%	55.30%	54.00%	53.23%	52.97%	79.43%	74.85%
	5	51.38%	48.64%	54.91%	54.00%	52.68%	52.85%	78.45%	73.96%
	10	51.23%	48.64%	54.94%	53.88%	52.24%	52.41%	75.87%	72.46%
	20	51.18%	48.64%	54.82%	53.76%	50.77%	51.65%	NA	NA
	30	51.23%	48.64%	54.11%	53.53%	49.31%	50.92%	NA	NA
50	2.5	62.98%	60.61%	68.02%	66.84%	65.69%	65.79%	74.83%	75.64%
	5	63.13%	60.61%	67.53%	66.76%	64.84%	65.45%	72.26%	74.18%
	10	63.00%	60.61%	67.56%	66.58%	63.86%	64.68%	NA	NA
	20	62.94%	60.53%	66.99%	66.14%	60.85%	63.21%	NA	NA
	30	63.00%	60.53%	66.02%	65.79%	NA	NA	NA	NA
75	2.5	68.38%	65.96%	73.26%	72.53%	70.81%	71.56%	NA	NA
	5	68.41%	65.96%	72.81%	72.39%	69.77%	70.96%	NA	NA
	10	68.53%	65.96%	72.58%	72.12%	68.07%	69.83%	NA	NA
	20	68.25%	65.91%	71.69%	71.56%	NA	NA	NA	NA
	30	68.40%	65.85%	70.35%	71.02%	NA	NA	NA	NA
100	2.5	70.99%	69.06%	76.64%	75.70%	73.87%	74.74%	NA	NA
	5	71.01%	69.01%	76.23%	75.53%	72.54%	73.96%	NA	NA
	10	71.06%	69.01%	75.83%	75.19%	70.05%	72.46%	NA	NA
	20	70.86%	68.92%	74.59%	74.46%	NA	NA	NA	NA
	30	70.84%	68.87%	72.96%	73.69%	NA	NA	NA	NA
125	2.5	72.17%	71.02%	78.57%	77.78%	75.95%	76.69%	NA	NA
	5	72.22%	70.98%	78.00%	77.54%	74.59%	75.76%	NA	NA
	10	72.32%	70.94%	77.46%	77.11%	NA	NA	NA	NA
	20	72.04%	70.86%	75.85%	76.17%	NA	NA	NA	NA
	30	72.11%	70.78%	73.98%	75.21%	NA	NA	NA	NA
150	2.5	72.59%	72.39%	80.29%	79.20%	77.21%	78.04%	NA	NA
	5	72.71%	72.36%	79.61%	78.95%	75.28%	76.92%	NA	NA
	10	72.63%	72.32%	78.81%	78.37%	NA	NA	NA	NA
	20	72.59%	72.22%	76.87%	77.24%	NA	NA	NA	NA
175	2.5	72.59%	73.41%	81.11%	80.24%	NA	NA	NA	NA
	5	72.73%	73.38%	80.42%	79.91%	NA	NA	NA	NA
	10	72.65%	73.31%	79.42%	79.29%	NA	NA	NA	NA
	20	72.52%	73.19%	77.10%	77.95%	NA	NA	NA	NA

TABLE 4
CORRELATION FACTORS AND SIMILARITY BETWEEN EXPERIMENTS AND SIMULATIONS

S. No.	Wiring Topology	Percentage Similarity
1	230 V AC	99.674 %
2	12 V DC	79.376 %
3	24 V DC	99.784 %
4	48 V DC	

Extensive Measurements and Analysis

The ampacity of the conductor and voltage drop are the two main constraints that limit the maximum power flow through the conductor. The maximum allowable voltage drop in the house wiring system is 5% as per AS/NZD 3000. Maximum power flow was calculated using GenCalc Software Package for specific conductor size and length. The proposed validated simulation models can be used to run thousands of simulations. Using the simulation model, extensive data have been collected as per the power limits for each wiring topology mentioned earlier.

Fast and Extensive Measurement

For each voltage level, 15,600 wiring cases can be used in residential houses based on the power rating of the load from 5 to 5000 W, conductor length 0.5–30 m, and size of the conductor (1 mm^2, 1.5 mm^2, and 2.5 mm^2). This sums to 62,400 wiring cases for four voltage levels, i.e., 230 V AC, 12 V DC, 24 V DC, and 48 V DC. Scripts are written in DigSilent Programming Language (DPL) to run 62,400 simulations as summarized in the flowchart shown in FIGURE 6. Approximately 62,400 wiring cases were simulated, and the measurements were exported to an Excel file within 60 seconds.

FIGURE 6
DIGITAL SIMULATION FLOW CHART

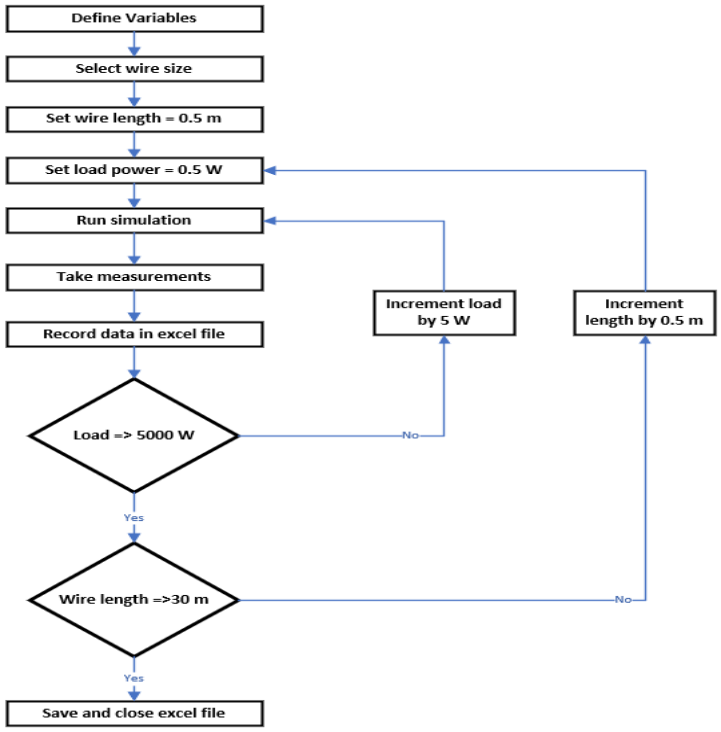

Boundary Conditions to Select Efficient Wiring Topology

The efficiency of 230 V AC, 12 V DC, 24 V DC, and 48 V DC wiring systems can be compared separately for 1 mm^2, 1.5 mm^2, and 2.5 mm^2 wire as shown in FIGURES 7, 8, and 9, respectively.

Efficient and acceptable boundary conditions can be selected for possible wiring options in future residential houses. For example, 12 V DC wiring topology is the most efficient and acceptable design option for 14 W load with 13 m 1 mm^2 wire as per the boundary conditions shown in FIGURE 7. However, 48 V DC wiring topology is the most efficient and acceptable design option for 14 W load with 17 m 1 mm^2 wire as per the boundary conditions shown in FIGURE 7. The power rating of a load can vary from a 5 W LED to a 1000 W heater. These loads can be used at various locations in the house, meaning that the length of conductor and thus load power are always different for loads in a residential house. Therefore, this research work concludes that the hybrid wiring system is recommended based on given boundary conditions to optimize the overall efficiency of the building.

FIGURE 7
EFFICIENT AND ACCEPTABLE WIRING OPTION FOR 1 mm^2 TPS 3-CORE CABLE

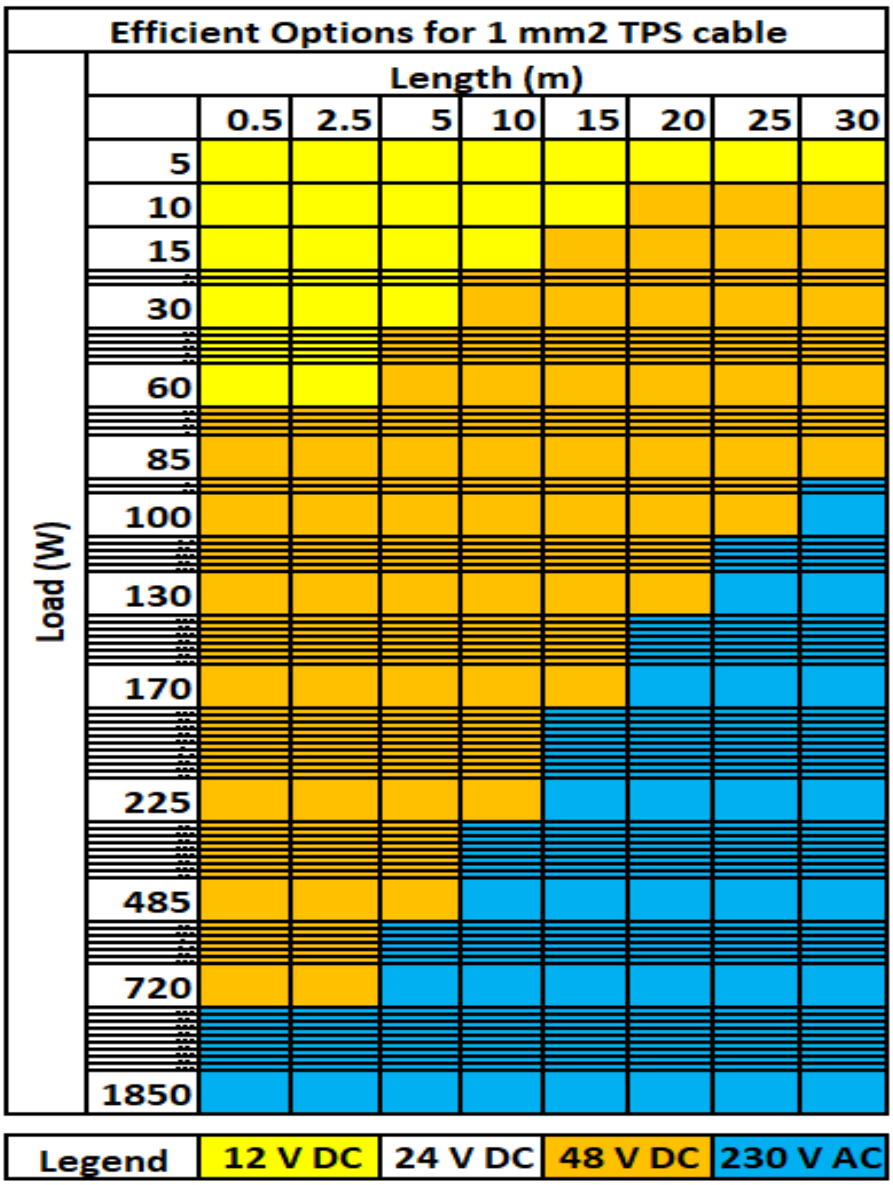

FIGURE 8
EFFICIENT AND ACCEPTABLE WIRING OPTION FOR 1.5 mm^2 TPS 3-CORE CABLE

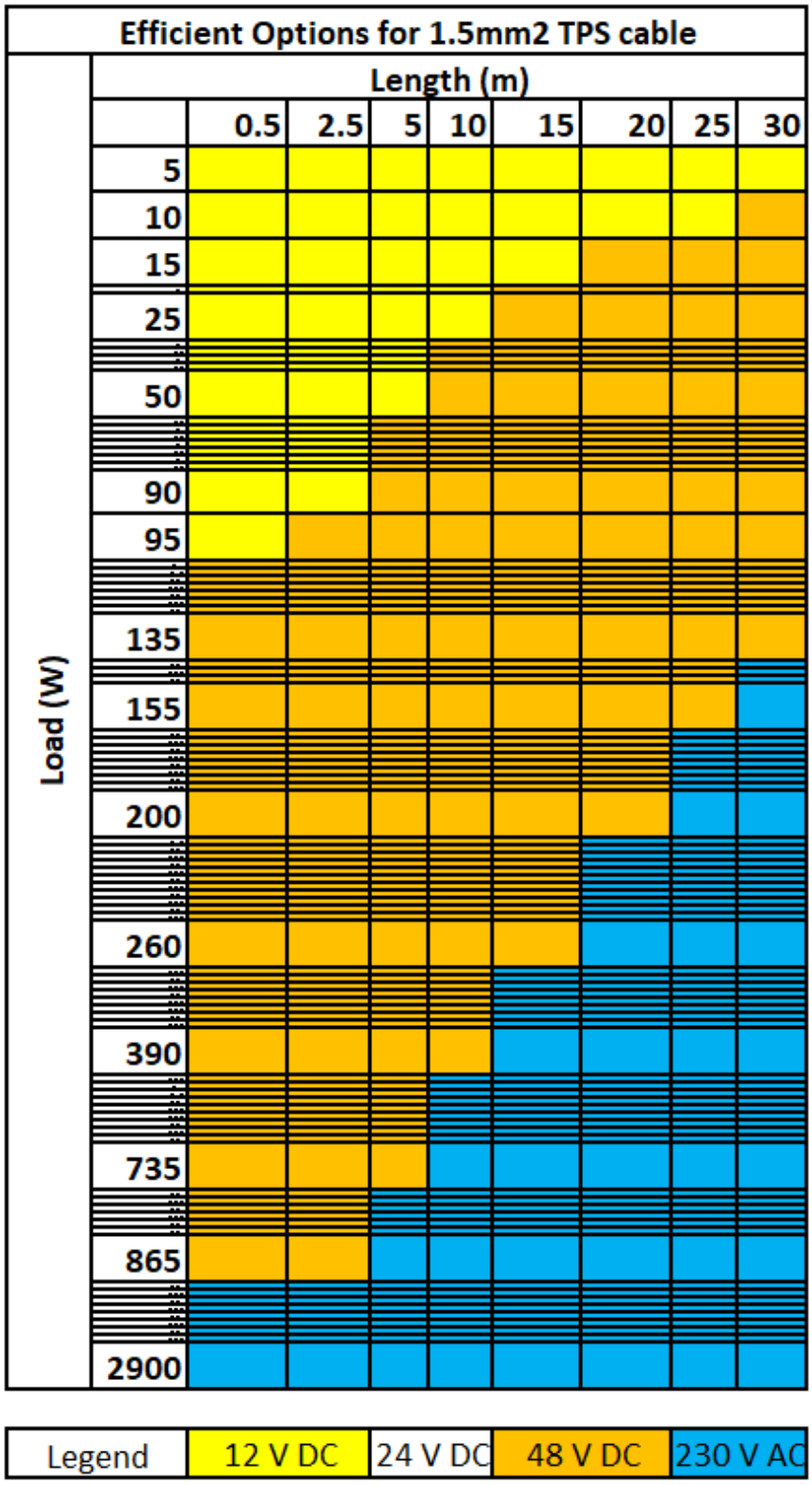

FIGURE 9
EFFICIENT AND ACCEPTABLE WIRING OPTION FOR 2.5 mm^2 TPS 3-CORE CABLE

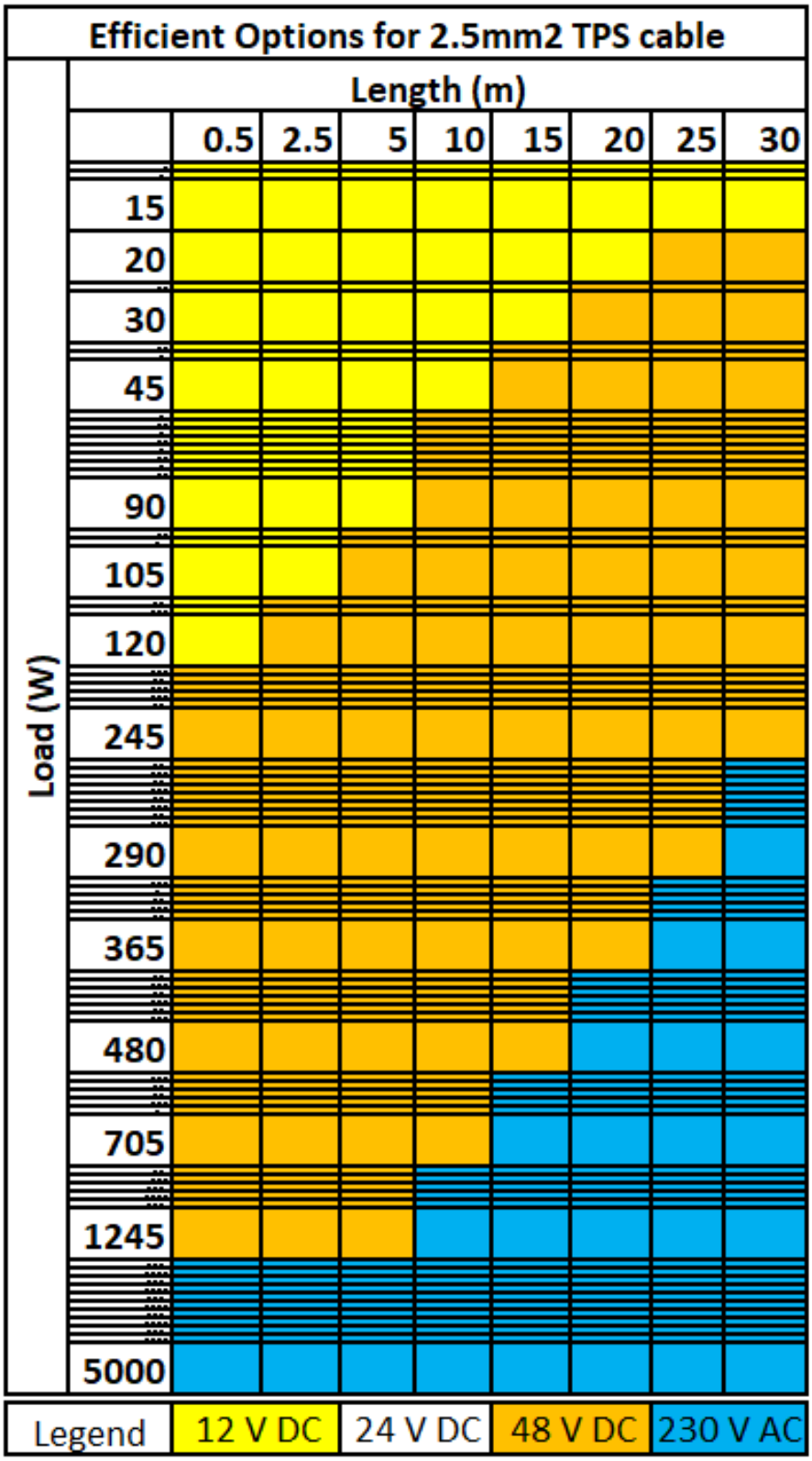

CONCLUSION

This paper developed a mathematical model based on data gathered from running thousands of experimental studies using a variety of wiring sizes and voltage levels. The digital simulation model was developed to validate the developed mathematical model as compared to the results of the experimental measurements. Utilizing the validated simulation model, extensive data were gathered by running several thousand simulation studies on a variety of electrical systems, i.e., 12 V DC, 24 V DC, 48 V DC, and 230 V AC. As a result, the most efficient and suitable wiring options using developed boundary conditions for 1 mm^2, 1.5 mm^2, and 2.5 mm^2 wire sizes were developed in order to select the most suitable electrical reticulation systems.

In summary, the proposed mathematical model can produce similar results compared to the experiment measurements without conducting time- and cost-consuming experimental studies. In addition, the proposed model can be utilized for any voltage level in electrical systems.

ACKNOWLEDGMENTS

The authors gratefully acknowledge Aurora Energy and MBIE SSIF AETP project entitled Architecture of the Future Low-Carbon, Resilient, Electrical Power System for in-kind support.

REFERENCES

Amin, M., Arafat, Y., Lundberg, S., & Mangold, S. (2011). Low voltage DC distribution system compared with 230 V AC. *IEEE Electrical Power and Energy Conference (EPEC)*, pp. 340–345.

Backhaus, S., Swift, G.W., Chatzivasileiadis, S., Tschudi, W., Glover, S., & Starke, M. (2015). *DC Microgrids Scoping Study—Estimate of Technical and Economic Benefits.* Los Alamos National Laboratory.

Boeke, U., & Wendt, M. (2015). DC power grids for buildings. *IEEE First International Conference on DC Microgrids (ICDCM)*, pp. 210–214.

Cetin, E., Yilanci, A., Ozturk, H.K., Colak, M., Kasikci, I., & Iplikci, S. (2010). A micro-DC power distribution system for a residential application energized by photovoltaic–wind/fuel cell hybrid energy systems. *Energy and Buildings*, *42*, 1344–1352.

Cornell's Artificial intelligence Lab. (2017). *Eureqa Formulize*. Retrieved from https://www.nutonian.com/products/

Cvetkovic, I., Dong, D., Zhang, W., Jiang, L., Boroyevich, D., & Lee, F.C. (2012). A testbed for experimental validation of a low-voltage DC nanogrid for buildings. In *15th International Power Electronics and Motion Control Conference (EPE/PEMC)* (pp. LS7c. 5–1-LS7c. 5–8).

DigSilent Power Factory. (2015). *Technical Refrence Documentation of PWM Converter* (ElmVsc, Elm Vscmono).

Djokic, S., Langella, R., Meyer, J., Stiegler, R., Testa, A., & Xu, X., (2017). On Evaluation of Power Electronic Devices' Efficiency for Nonsinusoidal Voltage Supply and Different Operating Powers. *IEEE Transactions on Instrumentation and Measurement*, *66*, 2216–2224.

Engelen, K., Shun, E.L., Vermeyen, P., Pardon, I., D'hulst, R., Driesen, J., *et al.* (2006). The feasibility of small-scale residential DC distribution systems. In *32nd Annual Conference on IEEE Industrial Electronics, IECON 2006* (pp. 2618–2623).

Eureqa Formulize. (2017). *User guide and resources*.

Friedeman, M., van Timmeren, A., Boelman, E., & Schoonman, J. (2008). 8 Concept for a DC–low voltage house. *Smart and Sustainable Built Environments*, p.85.

Garbesi, K. (2012). *Catalog of DC appliances and power systems*.

Hammerstrom, D.J. (2007). AC versus DC distribution systems - did we get it right? In *IEEE Power Engineering Society General Meeting* (pp. 1–5).

Justo, J.J., Mwasilu, F., Lee, J., & Jung, J.-W. (2013). AC-microgrids versus DC-microgrids with distributed energy resources: A review. *Renewable and Sustainable Energy Reviews*, *24*, 387–405.

Kaur, P., Jain, S., & Jhunjhunwala, A. (2015). Solar-DC deployment experience in off-grid and near off-grid homes: Economics, technology and policy analysis. In *IEEE First International Conference on DC Microgrids (ICDCM)* (pp. 26–31).

Li, J., Teng, Z., Wang, Y., Zhang, F., & Li, X. (2018). A Digital Calibration Approach for Reducing Phase Shift of Electronic Power Meter Measurement. *IEEE Transactions on Instrumentation and Measurement*, *67*, 1638–1645.

Nilsson, D., & Sannino, A. (2004). Efficiency analysis of low- and medium- voltage DC distribution systems. In *Power Engineering Society General Meeting* (vol. 2, pp. 2315–2321). *IEEE*.

Paajanen, P., Kaipia, T., & Partanen, J. (2009). DC supply of low-voltage electricity appliances in residential buildings. In *20th International Conference and Exhibition on Electricity Distribution-Part 1, 2009. CIRED 2009* (pp. 1–4).

Pellis, J., Rijt, V.D., Otterdijk, V., Khtj, I. *et al.* (1997). "The DC low-voltage house": Netherlands Energy Research Foundation ECN.

Postiglione, G. (2001). *DC distribution System for Home and Office*.

Qureshi, J.A., Lie, T.T., Gunawardane, K., & Kularatna, N. (2018). Extensive Measurements to Define Boundary Conditions for Efficient AC and DC Residential Houses. In *Conference on Precision Electromagnetic Measurements*. Paris, France.

Qureshi, J.A., Lie, T.T., Gunawardane, K.,. & Kularatna, N. (2021). AC and DC House Wiring Efficiency Estimations using Mathematical Modelling Approach. In *Australian Universities Power Engineering Conference*. Australia.

S.C.T.C. (Korea). (2011). Green Initiatives related with DC Buildings in KOREA.

Salomonsson, D., & Sannino, A. (2007). Low-voltage DC distribution system for commercial power systems with sensitive electronic loads. *IEEE Transactions on Power Delivery*, *22*, 1620–1627.

Schönberger, J., Duke, R., & Round, S.D. (2006). DC-bus signaling: A distributed control strategy for a hybrid renewable nanogrid. *IEEE Transactions on Industrial Electronics*, *53*, 1453–1460.

Seo, G.S., Choi, K., Bae, H., & Cho, B. (2011). Modeling and analysis of DC distribution systems. In *IEEE 8th International Conference on Power Electronics and ECCE Asia (ICPE & ECCE)*, pp. 223–227.

Starke, M., Tolbert, L.M., & Ozpineci, B. (2008). AC vs. DC distribution: A loss comparison. In *IEEE PES Transmission and Distribution Conference and Exposition 2008* (pp. 1–7).

Vossos, E. (2011). *Optimizing energy savings from Direct-DC in US residential buildings*.